CAP FIXED CLEVIS

Peninsular Mounting Style: **LM 3**

Medium Duty Aluminum Air Cylinder

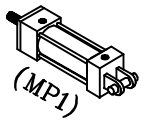

Peninsular Cylinder Co.

NFPA
NAAMS
ISO: DIN-VDMA

ISO 9001:2000 Registered

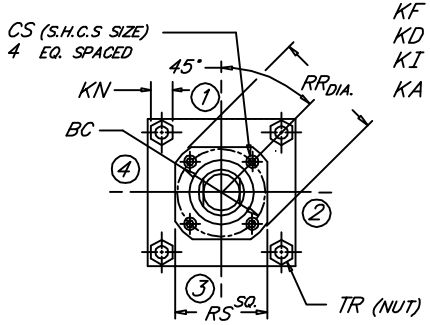

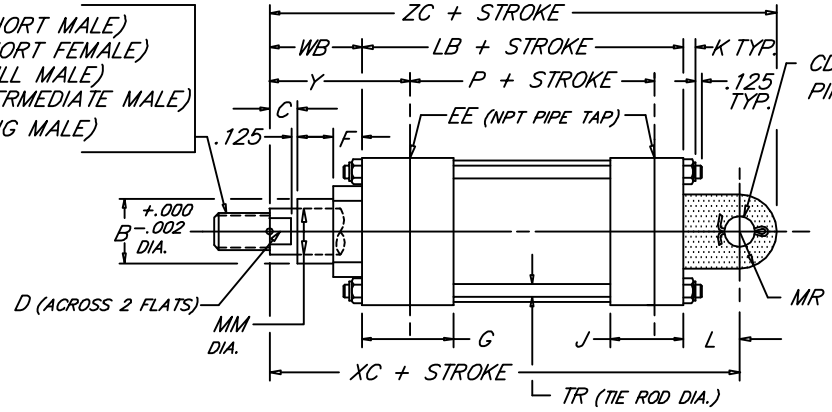

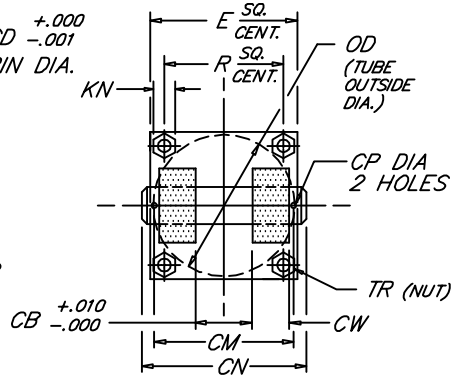

BORE	MM	KM & KF	KD	KI	KA	B	BC	C	CB	CD	CM	CN	CP	CS	CW	D	E	EE	F	G	J	K	KN	L	LB	MR	OD	P	R	RR	RS	TR	WB	XC	Y	ZC
	ROD	ROD THREAD X LENGTH																NPT																	
8.000	1.375	1"-14 x 1.625	1 3/8"-12 x 1.625	1 1/4"-12 x 1.625	1 1/4"-12 x 2.500	1.999	3.267	.625						.312		1.125													3.734	3.000		1.625	8.250	2.750	9.250
	1.750	1 1/4"-12 x 2.000	1 3/4"-12 x 2.000	1 1/2"-12 x 2.000	1 1/2"-12 x 3.000	2.374	3.267	.750						.312		1.500													3.734	3.000		1.875	8.500	3.000	9.500
	2.000	1 1/2"-12 x 2.250	2"-12 x 2.250	1 3/4"-12 x 2.250	1 3/4"-12 x 3.500	2.624	3.812	.875						.312		1.688													4.312	3.750		2.000	8.625	3.125	9.625
	2.500	1 7/8"-12 x 3.000	2 1/2"-12 x 3.000	2 1/4"-12 x 3.000	2 1/4"-12 x 4.500	3.124	3.812	1.000						.312		2.062													4.312	3.750		2.250	8.875	3.375	9.875
	3.000	2 1/4"-12 x 3.500	3"-12 x 3.500	2 3/4"-12 x 3.500	2 3/4"-12 x 5.500	3.749	4.700	1.000						.375		2.625													5.562	4.500		2.250	8.875	3.375	9.875
	3.500	2 1/2"-12 x 3.500	3 1/2"-12 x 3.500	3 1/4"-12 x 3.500	3 1/4"-12 x 6.500	4.249	5.200	1.000	1.515	1.000	3.219	3.594	.140	.375	.750	3.000	8.500	3/4	.625	2.000	1.500	.750	.938	1.500	5.125	1.000	8.450	3.375	6.435	6.062	5.000	.625	2.250	8.875	3.375	9.875
	4.000	3"-12 x 4.000	4"-12 x 4.000	3 3/4"-12 x 4.000	3 3/4"-12 x 7.500	4.749	5.700	1.000						.375		3.375													6.562	5.500		2.250	8.875	3.375	9.875
	4.500	3 1/4"-12 x 4.500	4 1/2"-12 x 4.500	4 1/4"-12 x 4.500	4 1/4"-12 x 8.250	5.249	6.200	1.000						.375		3.875													7.062	6.000		2.250	8.875	3.375	9.875
	5.000	3 1/2"-12 x 5.000	5"-12 x 5.000	4 3/4"-12 x 5.000	4 3/4"-12 x 9.000	5.749	6.700	1.000						.375		4.250													7.562	6.500		2.250	8.875	3.375	9.875
	5.500	4"-12 x 5.500	5 1/2"-12 x 5.500	5 1/4"-12 x 5.500	5 1/4"-12 x 10.000	6.249	7.125	1.000						.375		4.625													7.938	7.000		2.250	8.875	3.375	9.875
10.000	1.750	1 1/4"-12 x 2.000	1 3/4"-12 x 2.000	1 1/2"-12 x 2.000	1 1/2"-12 x 3.000	2.374	3.812	.750						.312		1.500													4.312	3.750		1.875	10.375	3.062	11.750
	2.000	1 1/2"-12 x 2.250	2"-12 x 2.250	1 3/4"-12 x 2.250	1 3/4"-12 x 3.500	2.624	3.812	.875						.312		1.688													4.312	3.750		2.000	10.500	3.187	11.875
	2.500	1 7/8"-12 x 3.000	2 1/2"-12 x 3.000	2 1/4"-12 x 3.000	2 1/4"-12 x 4.500	3.124	3.812	1.000						.312		2.062													4.312	3.750		2.250	10.750	3.437	12.125
	3.000	2 1/4"-12 x 3.500	3"-12 x 3.500	2 3/4"-12 x 3.500	2 3/4"-12 x 5.500	3.749	4.700	1.000						.375		2.625													5.562	4.500		2.250	10.750	3.437	12.125
	3.500	2 1/2"-12 x 3.500	3 1/2"-12 x 3.500	3 1/4"-12 x 3.500	3 1/4"-12 x 6.500	4.249	5.200	1.000	2.015	1.375	4.250	4.656	.173	.375	1.000	3.000	10.625	1	.625	2.250	2.000	.875	1.062	2.125	6.375	1.375	10.450	4.250	7.920	6.062	5.000	.750	2.250	10.750	3.437	12.125
	4.000	3"-12 x 4.000	4"-12 x 4.000	3 3/4"-12 x 4.000	3 3/4"-12 x 7.500	4.749	5.700	1.000						.375		3.375													6.562	5.500		2.250	10.750	3.437	12.125
	4.500	3 1/4"-12 x 4.500	4 1/2"-12 x 4.500	4 1/4"-12 x 4.500	4 1/4"-12 x 8.250	5.249	6.200	1.000						.375		3.875													7.062	6.000		2.250	10.750	3.437	12.125
	5.000	3 1/2"-12 x 5.000	5"-12 x 5.000	4 3/4"-12 x 5.000	4 3/4"-12 x 9.000	5.749	6.700	1.000						.375		4.250													7.562	6.500		2.250	10.750	3.437	12.125
	5.500	4"-12 x 5.500	5 1/2"-12 x 5.500	5 1/4"-12 x 5.500	5 1/4"-12 x 10.000	6.249	7.125	1.000						.375		4.625													7.938	7.000		2.250	10.750	3.437	12.125
12.000	2.000	1 1/2"-12 x 2.250	2"-12 x 2.250	1 3/4"-12 x 2.250	1 3/4"-12 x 3.500	2.624	3.812	.875						.312		1.688													4.312	3.750		2.000	11.125	3.187	12.875
	2.500	1 7/8"-12 x 3.000	2 1/2"-12 x 3.000	2 1/4"-12 x 3.000	2 1/4"-12 x 4.500	3.124	3.812	1.000						.312		2.062													4.312	3.750		2.250	11.375	3.437	13.125
	3.000	2 1/4"-12 x 3.500	3"-12 x 3.500	2 3/4"-12 x 3.500	2 3/4"-12 x 5.500	3.749	4.700	1.000						.375		2.625													5.562	4.500		2.250	11.375	3.437	13.125
	3.500	2 1/2"-12 x 3.500	3 1/2"-12 x 3.500	3 1/4"-12 x 3.500	3 1/4"-12 x 6.500	4.249	5.200	1.000	2.515	1.750	5.250	5.656	.173	.375	1.250	3.000	12.750	1	.625	2.250	2.000	.875	1.062	2.250	6.875	1.750	12.450	4.750	9.405	6.062	5.000	.750	2.250	11.375	3.437	13.125
	4.000	3"-12 x 4.000	4"-12 x 4.000	3 3/4"-12 x 4.000	3 3/4"-12 x 7.500	4.749	5.700	1.000						.375		3.375													6.562	5.500		2.250	11.375	3.437	13.125
	4.500	3 1/4"-12 x 4.500	4 1/2"-12 x 4.500	4 1/4"-12 x 4.500	4 1/4"-12 x 8.250	5.249	6.200	1.000						.375		3.875													7.062	6.000		2.250	11.375	3.437	13.125
	5.000	3 1/2"-12 x 5.000	5"-12 x 5.000	4 3/4"-12 x 5.000	4 3/4"-12 x 9.000	5.749	6.700	1.000						.375		4.250													7.562	6.500		2.250	11.375	3.437	13.125
	5.500	4"-12 x 5.500	5 1/2"-12 x 5.500	5 1/4"-12 x 5.500	5 1/4"-12 x 10.000	6.249	7.125	1.000						.375		4.625													7.938	7.000		2.250	11.375	3.437	13.125
14.000	2.500	1 7/8"-12 x 3.000	2 1/2"-12 x 3.000	2 1/4"-12 x 3.000	2 1/4"-12 x 4.500	3.124	3.812							.312		2.062													4.312	3.750					
	3.000	2 1/4"-12 x 3.500	3"-12 x 3.500	2 3/4"-12 x 3.500	2 3/4"-12 x 5.500	3.749	4.700							.375		2.625													5.562	4.500					
	3.500	2 1/2"-12 x 3.500	3 1/2"-12 x 3.500	3 1/4"-12 x 3.500	3 1/4"-12 x 6.500	4.249	5.200							.375		3.000													6.062	5.000					
	4.000	3"-12 x 4.000	4"-12 x 4.000	3 3/4"-12 x 4.000	3 3/4"-12 x 7.500	4.749	5.700	1.000	2.515	2.000	5.281	5.719	.204	.375	1.250	3.375	14.750	1 1/4	.625	2.750	2.250	1.000	1.250	2.500	8.125	2.000	14.450	5.625	10.889	6.562	5.500	.875	2.250	12.875	3.688	14.875
	4.500	3 1/4"-12 x 4.500	4 1/2"-12 x 4.500	4 1/4"-12 x 4.500	4 1/4"-12 x 8.250	5.249	6.200							.375		3.875													7.062	6.000					
	5.000	3 1/2"-12 x 5.000	5"-12 x 5.000	4 3/4"-12 x 5.000	4 3/4"-12 x 9.000	5.749	6.700							.375		4.250													7.562	6.500					
	5.500	4"-12 x 5.500	5 1/2"-12 x 5.500	5 1/4"-12 x 5.500	5 1/4"-12 x 10.000	6.249	7.125							.375		4.625													7.938	7.000					
BORE	MM	KM & KF	KD	KI	KA	B	BC	C	CB	CD	CM	CN	CP	CS	CW	D	E	EE	F	G	J	K	KN	L	LB	MR	OD	P	R	RR	RS	TR	WB	XC	Y	ZC

NEVA DESIGN

FILE: LM3L2.dwg REV: 09-25-06

27650 Groesbeck Hwy • Roseville, MI 48066-2759 • Phone 586.775.7211 • Fax 586.775.4545 • Toll Free 800.526.7968 • e-mail: sales@peninsularcylinders.com • www.peninsularcylinders.com