HEAD & CAP TIE ROD EXTENDED

Peninsular Mounting Style: **LM 12**

Medium Duty Aluminum Air Cylinder

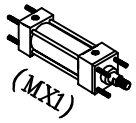

Peninsular Cylinder Co.

NFPA
NAAMS
ISO: DIN-VDMA

ISO 9001:2000 Registered

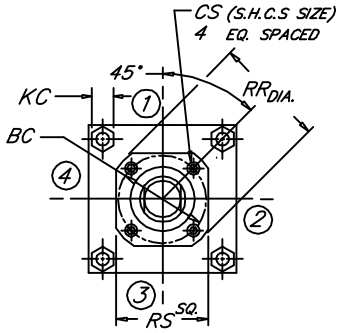

KM (SHORT MALE)
KF (SHORT FEMALE)
KD (FULL MALE)
KI (INTERMEDIATE MALE)
KA (LONG MALE)

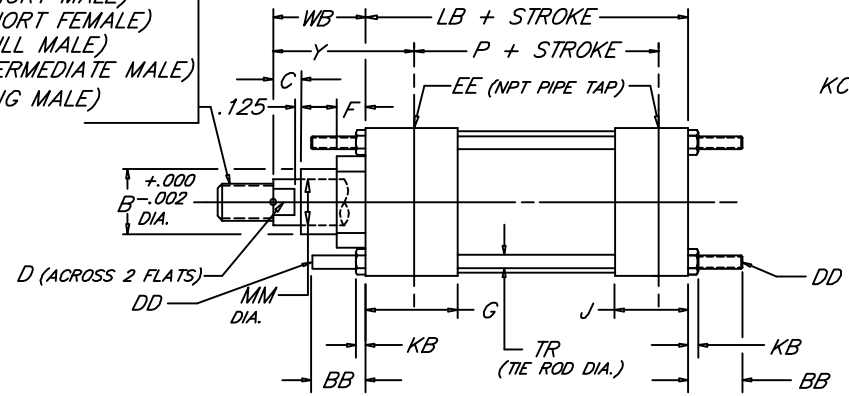

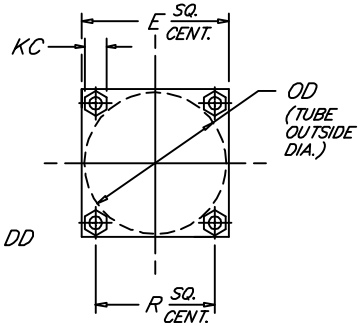

BORE	ROD MM	ROD THREAD X LENGTH KM & KF	KD	KI	KA	B	BB	BC	C	CS	D	DD	E	NPT EE	F	G	J	KB	KC	LB	OD	P	R	RR	RS	TR	WB	Y
8.000	1.375	1"-14 x 1.625	1 3/8"-12 x 1.625	1 1/4"-12 x 1.625	1 1/4"-12 x 2.500	1.999	2.312	3.267	.625	.312	1.125	5/8"-18	8.500	3/4	.625	2.000	1.500	.531	.938	5.125	8.450	3.375	6.435	3.734	3.000	.625	1.625	2.750
	1.750	1 1/4"-12 x 2.000	1 3/4"-12 x 2.000	1 1/2"-12 x 2.000	1 1/2"-12 x 3.000	2.374		3.267	.750	.312	1.500													3.734	3.000		1.875	3.000
	2.000	1 1/2"-12 x 2.250	2"-12 x 2.250	1 3/4"-12 x 2.250	1 3/4"-12 x 3.500	2.624		3.812	.875	.312	1.688													4.312	3.750		2.000	3.125
	2.500	1 7/8"-12 x 3.000	2 1/2"-12 x 3.000	2 1/4"-12 x 3.000	2 1/4"-12 x 4.500	3.124		3.812	1.000	.312	2.062													4.312	3.750		2.250	3.375
	3.000	2 1/4"-12 x 3.500	3"-12 x 3.500	2 3/4"-12 x 3.500	2 3/4"-12 x 5.500	3.749		4.700	1.000	.375	2.625													5.562	4.500		2.250	3.375
	3.500	2 1/2"-12 x 3.500	3 1/2"-12 x 3.500	3 1/4"-12 x 3.500	3 1/4"-12 x 6.500	4.249		5.200	1.000	.375	3.000													6.062	5.000		2.250	3.375
	4.000	3"-12 x 4.000	4"-12 x 4.000	3 3/4"-12 x 4.000	3 3/4"-12 x 7.500	4.749		5.700	1.000	.375	3.375													6.562	5.500		2.250	3.375
	4.500	3 1/4"-12 x 4.500	4 1/2"-12 x 4.500	4 1/4"-12 x 4.500	4 1/4"-12 x 8.250	5.249		6.200	1.000	.375	3.875													7.062	6.000		2.250	3.375
	5.000	3 1/2"-12 x 5.000	5"-12 x 5.000	4 3/4"-12 x 5.000	4 3/4"-12 x 9.000	5.749		6.700	1.000	.375	4.250													7.562	6.500		2.250	3.375
	5.500	4"-12 x 5.500	5 1/2"-12 x 5.500	5 1/4"-12 x 5.500	5 1/4"-12 x 10.000	6.249		7.125	1.000	.375	4.625													7.938	7.000		2.250	3.375
10.000	1.750	1 1/4"-12 x 2.000	1 3/4"-12 x 2.000	1 1/2"-12 x 2.000	1 1/2"-12 x 3.000	2.374	2.688	3.812	.750	.312	1.500	3/4"-16	10.625	1	.625	2.250	2.000	.625	1.094	6.375	10.450	4.250	7.920	4.312	3.750	.750	1.875	3.062
	2.000	1 1/2"-12 x 2.250	2"-12 x 2.250	1 3/4"-12 x 2.250	1 3/4"-12 x 3.500	2.624		3.812	.875	.312	1.688													4.312	3.750		2.000	3.187
	2.500	1 7/8"-12 x 3.000	2 1/2"-12 x 3.000	2 1/4"-12 x 3.000	2 1/4"-12 x 4.500	3.124		3.812	1.000	.312	2.062													4.312	3.750		2.250	3.437
	3.000	2 1/4"-12 x 3.500	3"-12 x 3.500	2 3/4"-12 x 3.500	2 3/4"-12 x 5.500	3.749		4.700	1.000	.375	2.625													5.562	4.500		2.250	3.437
	3.500	2 1/2"-12 x 3.500	3 1/2"-12 x 3.500	3 1/4"-12 x 3.500	3 1/4"-12 x 6.500	4.249		5.200	1.000	.375	3.000													6.062	5.000		2.250	3.437
	4.000	3"-12 x 4.000	4"-12 x 4.000	3 3/4"-12 x 4.000	3 3/4"-12 x 7.500	4.749		5.700	1.000	.375	3.375													6.562	5.500		2.250	3.437
	4.500	3 1/4"-12 x 4.500	4 1/2"-12 x 4.500	4 1/4"-12 x 4.500	4 1/4"-12 x 8.250	5.249		6.200	1.000	.375	3.875													7.062	6.000		2.250	3.437
	5.000	3 1/2"-12 x 5.000	5"-12 x 5.000	4 3/4"-12 x 5.000	4 3/4"-12 x 9.000	5.749		6.700	1.000	.375	4.250													7.562	6.500		2.250	3.437
	5.500	4"-12 x 5.500	5 1/2"-12 x 5.500	5 1/4"-12 x 5.500	5 1/4"-12 x 10.000	6.249		7.125	1.000	.375	4.625													7.938	7.000		2.250	3.437
12.000	2.000	1 1/2"-12 x 2.250	2"-12 x 2.250	1 3/4"-12 x 2.250	1 3/4"-12 x 3.500	2.624	2.688	3.812	.875	.312	1.688	3/4"-16	12.750	1	.625	2.250	2.000	.625	1.094	6.875	12.450	4.750	9.405	4.312	3.750	.750	2.000	3.187
	2.500	1 7/8"-12 x 3.000	2 1/2"-12 x 3.000	2 1/4"-12 x 3.000	2 1/4"-12 x 4.500	3.124		3.812	1.000	.312	2.062													4.312	3.750		2.250	3.437
	3.000	2 1/4"-12 x 3.500	3"-12 x 3.500	2 3/4"-12 x 3.500	2 3/4"-12 x 5.500	3.749		4.700	1.000	.375	2.625													5.562	4.500		2.250	3.437
	3.500	2 1/2"-12 x 3.500	3 1/2"-12 x 3.500	3 1/4"-12 x 3.500	3 1/4"-12 x 6.500	4.249		5.200	1.000	.375	3.000													6.062	5.000		2.250	3.437
	4.000	3"-12 x 4.000	4"-12 x 4.000	3 3/4"-12 x 4.000	3 3/4"-12 x 7.500	4.749		5.700	1.000	.375	3.375													6.562	5.500		2.250	3.437
	4.500	3 1/4"-12 x 4.500	4 1/2"-12 x 4.500	4 1/4"-12 x 4.500	4 1/4"-12 x 8.250	5.249		6.200	1.000	.375	3.875													7.062	6.000		2.250	3.437
	5.000	3 1/2"-12 x 5.000	5"-12 x 5.000	4 3/4"-12 x 5.000	4 3/4"-12 x 9.000	5.749		6.700	1.000	.375	4.250													7.562	6.500		2.250	3.437
	5.500	4"-12 x 5.500	5 1/2"-12 x 5.500	5 1/4"-12 x 5.500	5 1/4"-12 x 10.000	6.249		7.125	1.000	.375	4.625													7.938	7.000		2.250	3.437
14.000	2.500	1 7/8"-12 x 3.000	2 1/2"-12 x 3.000	2 1/4"-12 x 3.000	2 1/4"-12 x 4.500	3.124	3.188	3.812		.312	2.062	7/8"-14	14.750	1 1/4	.625	2.750	2.250	.750	1.281	8.125	14.450	5.625	10.889	4.312	3.750	.875	2.250	3.688
	3.000	2 1/4"-12 x 3.500	3"-12 x 3.500	2 3/4"-12 x 3.500	2 3/4"-12 x 5.500	3.749		4.700		.375	2.625													5.562	4.500			
	3.500	2 1/2"-12 x 3.500	3 1/2"-12 x 3.500	3 1/4"-12 x 3.500	3 1/4"-12 x 6.500	4.249		5.200		.375	3.000													6.062	5.000			
	4.000	3"-12 x 4.000	4"-12 x 4.000	3 3/4"-12 x 4.000	3 3/4"-12 x 7.500	4.749		5.700	1.000	.375	3.375													6.562	5.500			
	4.500	3 1/4"-12 x 4.500	4 1/2"-12 x 4.500	4 1/4"-12 x 4.500	4 1/4"-12 x 8.250	5.249		6.200		.375	3.875													7.062	6.000			
	5.000	3 1/2"-12 x 5.000	5"-12 x 5.000	4 3/4"-12 x 5.000	4 3/4"-12 x 9.000	5.749		6.700		.375	4.250													7.562	6.500			
	5.500	4"-12 x 5.500	5 1/2"-12 x 5.500	5 1/4"-12 x 5.500	5 1/4"-12 x 10.000	6.249		7.125		.375	4.625													7.938	7.000			
BORE	MM	KM & KF	KD	KI	KA	B	BB	BC	C	CS	D	DD	E	EE	F	G	J	KB	KC	LB	OD	P	R	RR	RS	TR	WB	Y

NEVA DESIGN

LM12L2.dwg REV: 09-25-06

27650 Groesbeck Hwy • Roseville, MI 48066-2759 • Phone 586.775.7211 • Fax 586.775.4545 • Toll Free 800.526.7968 • e-mail: sales@peninsularcylinders.com • www.peninsularcylinders.com