CAP FIXED CLEVIS

Peninsular
Mounting Style: **HP 3**

Heavy Duty Hydraulic Cylinder • 3000 P.S.I. Working Pressure • 5000 P.S.I. Rated Pressure

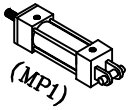

Peninsular Cylinder Co.

NFPA
NAAMS
ISO: DIN-VDMA

ISO 9001:2000 Registered

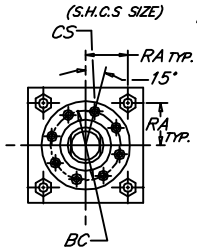

8" BORE

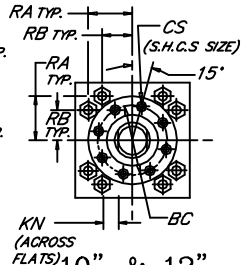

10" & 12" BORES

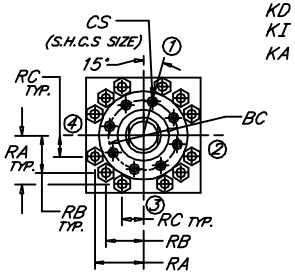

14" BORE

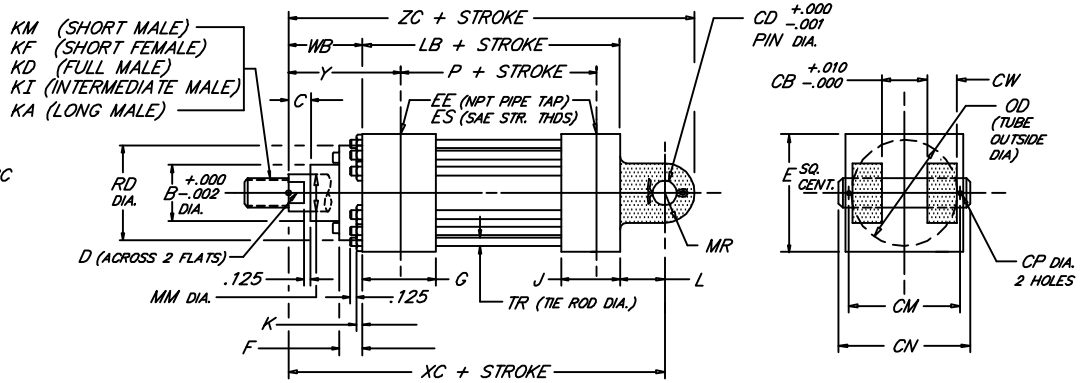

BORE	ROD MM	ROD THREAD X LENGTH KM & KF	KD	KI	KA	B	BC	C	CB	CD	CN	CM	CP	CS	CW	D	E	NPT EE	SAE ES	F	G	J	K	KN	L	LB	MR	P	OD	RA	RB	RC	RD	TR	WB	XC	Y	ZC
8.000	3.500	2 1/2"-12 x 3.500	3 1/2"-12 x 3.500	3 1/4"-12 x 3.500	3 1/4"-12 x 6.500	4.249	5.000							.375		3.000				.375													5.562					
	4.000	3"-12 x 4.000	4"-12 x 4.000	3 3/4"-12 x 4.000	3 3/4"-12 x 7.500	4.749	5.625							.438		3.375				.500													6.500					
	4.500	3 1/4"-12 x 4.500	4 1/2"-12 x 4.500	4 1/4"-12 x 4.500	4 1/4"-12 x 8.250	5.249	6.375	1.000	3.015	3.000	6.844	6.344	.250	.500	1.500	3.875	9.500	1 1/2	-24	.500	3.000	3.000	1.188	1.844	3.250	9.500	2.750	6.125	9.250	3.750	---	---	7.260	1.250	2.250	15.000	3.938	17.750
	5.000	3 1/2"-12 x 5.000	5"-12 x 5.000	4 3/4"-12 x 5.000	4 3/4"-12 x 9.000	5.749	6.875							.500		4.250				.500													7.750					
	5.500	4"-12 x 5.500	5 1/2"-12 x 5.500	5 1/4"-12 x 5.500	5 1/4"-12 x 10.000	6.249	7.375							.500		4.625				.500													8.260					
10.000	4.500	3 1/4"-12 x 4.500	4 1/2"-12 x 4.500	4 1/4"-12 x 4.500	4 1/4"-12 x 8.250	5.249	6.375							.500		3.875				.500													7.260		2.937	19.062	4.750	22.562
	5.000	3 1/2"-12 x 5.000	5"-12 x 5.000	4 3/4"-12 x 5.000	4 3/4"-12 x 9.000	5.749	6.875							.500		4.250				.500													7.750		3.187	19.312	5.000	22.812
	5.500	4"-12 x 5.500	5 1/2"-12 x 5.500	5 1/4"-12 x 5.500	5 1/4"-12 x 10.000	6.249	7.375	1.000	4.015	3.500	8.969	8.406	.312	.500	2.000	4.625	12.625	2	-32	.500	3.688	3.688	1.094	1.656	4.000	12.125	3.500	8.500	11.750	5.291	3.775	---	8.260	1.125	3.187	19.312	5.000	22.812
	6.000	4 1/2"-12 x 6.000	6"-12 x 6.000	5 3/4"-12 x 6.000	5 3/4"-12 x 10.000	6.749	8.500							.625		5.125				.875													10.000		3.437	19.562	5.250	23.062
	7.000	5"-12 x 7.000	7"-12 x 7.000	6 1/2"-12 x 7.000	6 1/2"-12 x 10.000	7.749	9.437							.625		6.000				.875													10.500		3.437	19.562	5.250	23.062
12.000	5.500	4"-12 x 5.500	5 1/2"-12 x 5.500	5 1/4"-12 x 5.500	5 1/4"-12 x 10.000	6.249	7.375							.500		4.625				.500													8.260		3.187	22.187	5.375	26.187
	6.000	4 1/2"-12 x 6.000	6"-12 x 6.000	5 3/4"-12 x 6.000	5 3/4"-12 x 10.000	6.749	8.500	1.000	4.515	4.000	9.969	9.406	.312	.625	2.250	5.125	14.875	2 1/2	-32	.875	4.438	4.438	1.188	1.844	4.500	14.500	4.000	10.125	14.000	6.270	4.555	---	10.000	1.250	3.437	22.437	5.625	26.437
	7.000	5"-12 x 7.000	7"-12 x 7.000	6 1/2"-12 x 7.000	6 1/2"-12 x 10.000	7.749	9.437							.625		6.000				.875													10.500		3.437	22.437	5.625	26.437
	8.000	5 3/4"-12 x 8.000	8"-12 x 8.000	7 1/2"-12 x 8.000	7 1/2"-12 x 12.000	8.749	10.500							.625		7.000				.875													12.000		3.437	22.437	5.625	26.437
14.000	7.000	5"-12 x 7.000	7"-12 x 7.000	6 1/2"-12 x 7.000	6 1/2"-12 x 10.000	7.749	9.437									6.000																	10.500					
	8.000	5 3/4"-12 x 8.000	8"-12 x 8.000	7 1/2"-12 x 8.000	7 1/2"-12 x 12.000	8.749	10.500	1.000	6.015	5.000	12.969	12.406	.312	.625	3.000	7.000	17.125	3	-32	.875	4.875	4.875	1.188	1.844	5.750	15.625	5.000	10.875	16.000	7.485	6.143	4.409	12.000	1.250	3.437	24.812	5.625	29.812
	9.000	6 1/2"-12 x 9.000	9"-12 x 9.000	8 1/2"-12 x 9.000	8 1/2"-12 x 13.500	9.749	11.500									7.875																	13.000					
	10.000	7 1/4"-12 x 10.000	10"-12 x 10.000	9 1/2"-12 x 10.000	9 1/2"-12 x 15.000	10.749	12.500									8.625																	14.000					
BORE	MM	KM & KF	KD	KI	KA	B	BC	C	CB	CD	CN	CM	CP	CS	CW	D	E	EE	ES	F	G	J	K	KN	L	LB	MR	P	OD	RA	RB	RC	RD	TR	WB	XC	Y	ZC

NEVA DESIGN

FILE: HP03L2.dwg REV: 09-25-06

27650 Groesbeck Hwy • Roseville, MI 48066-2759 • Phone 586.775.7211 • Fax 586.775.4545 • Toll Free 800.526.7968 • e-mail: sales@peninsularcylinders.com • www.peninsularcylinders.com